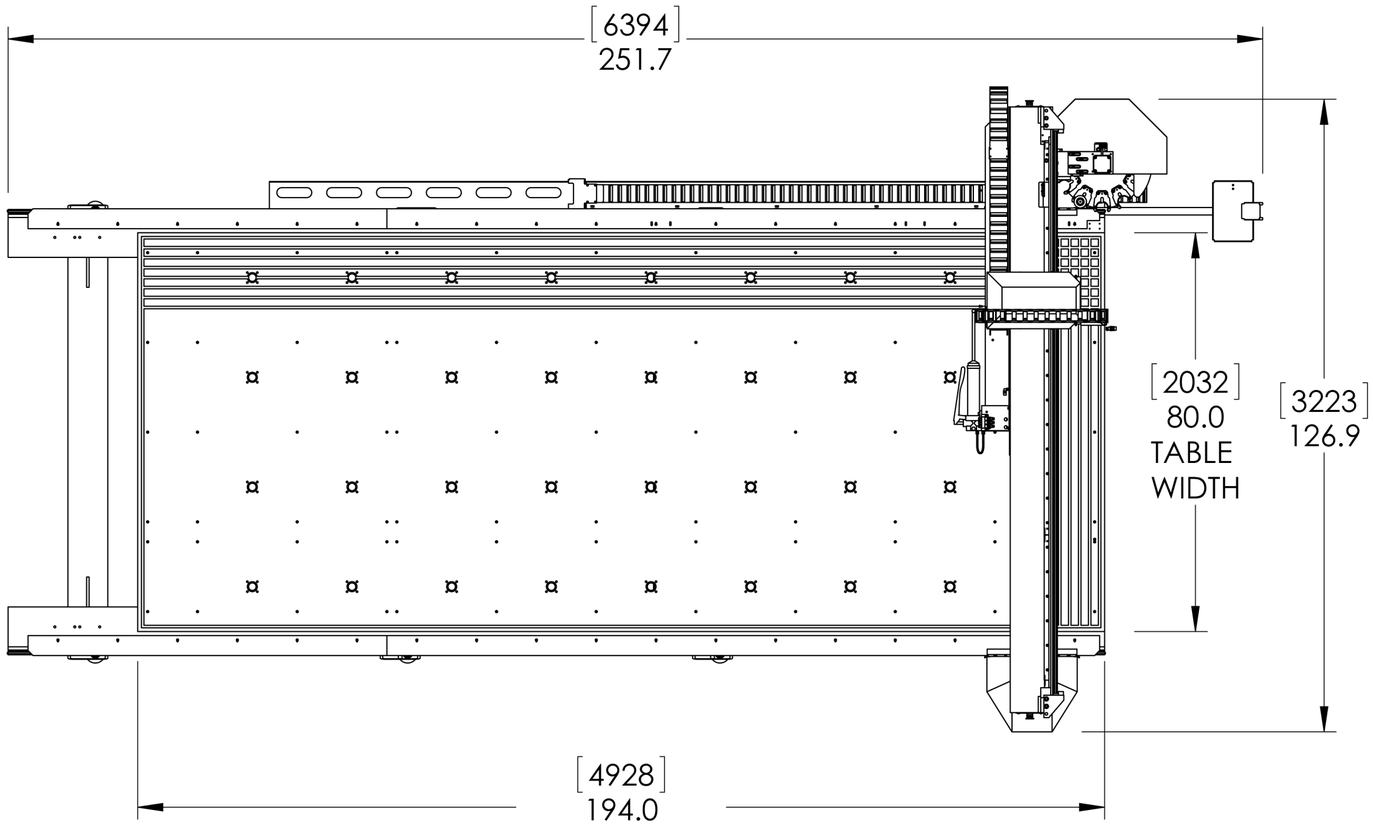


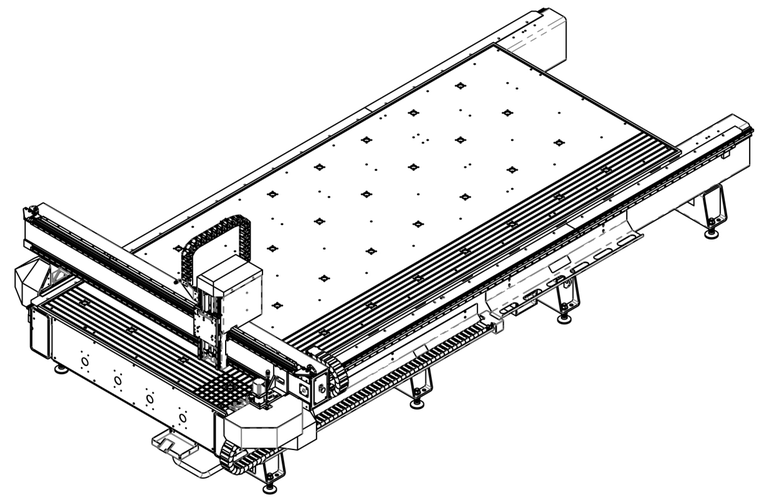

APPROXIMATE WEIGHT 9,000 LBS.
4,100 KGS

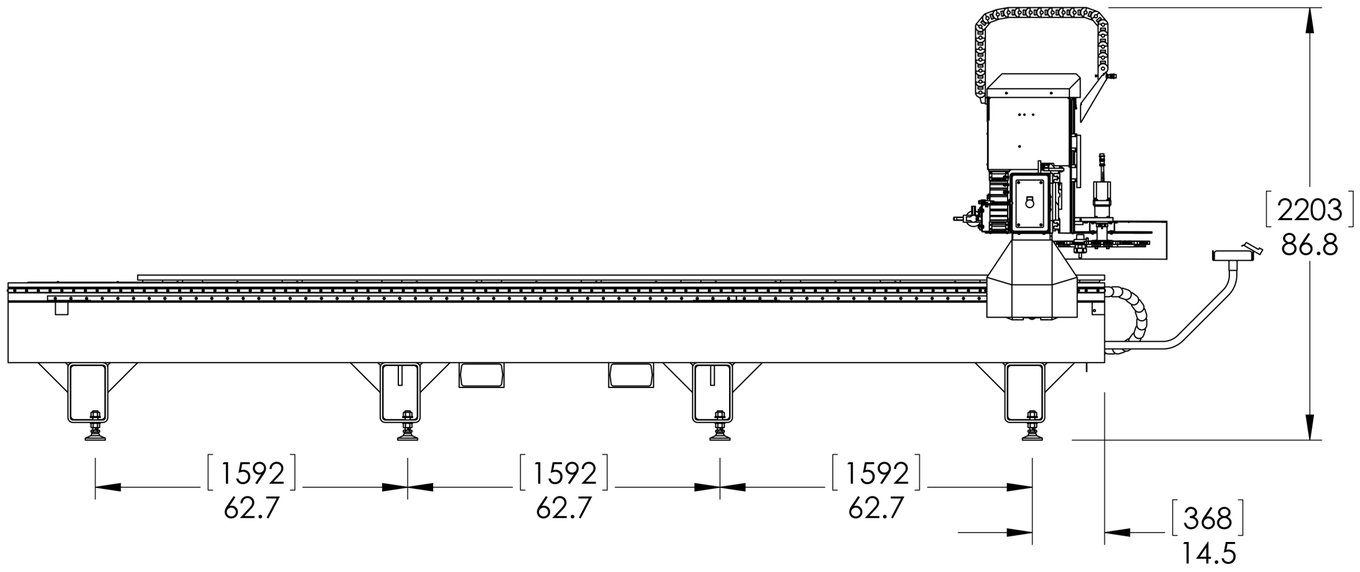


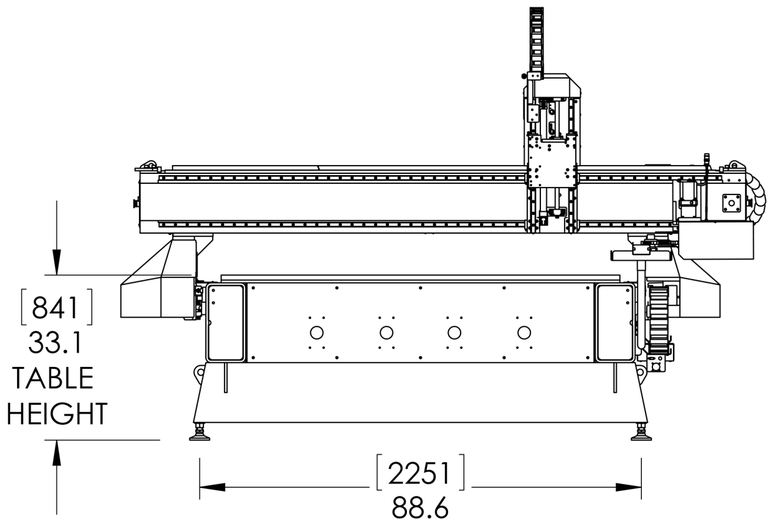


| DESCRIPTION | ECN # | DATE | BY | CK |
|---|---|---|---|---|
| | | | | |

| APPROVALS | DATE |
|---|---|
| DESIGN CRH | 5/11/2004 |
| DRAWN KDC | 8/9/2011 |
| CHECKED | |
| APPROVED | |

UNLESS OTHERWISE SPECIFIED DIMENSIONS ARE IN INCHES
DECIMALS X.X = ±0.030 X.XX = ±0.010 X.XXX = ±0.005 FRACTION= ±1/32
ANGLE X.X = ±1.0° X.XX = ±0.5° SURFACE FINISH 125 <MOD-SURFACE>

MATERIAL: SEE BOM

FINISH

DO NOT SCALE DRAWING

MIKON MACHINERY

THE INFORMATION CONTAINED IN THIS DRAWING IS THE SOLE PROPERTY OF MULTICAM. ANY REPRODUCTION IN PART OR WHOLE WITHOUT THE WRITTEN PERMISSION OF MULTICAM IS PROHIBITED.

# 5000 SERIES PLAN VIEW

SIZE C | PART NO. 5307 LAYOUT | REV. -

SCALE 1:24 | CAD FILE 5000 top assy | SHEET 1 OF 2